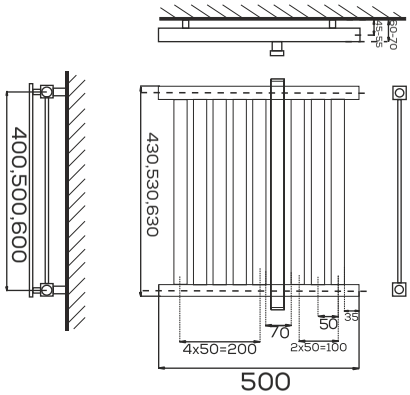

500

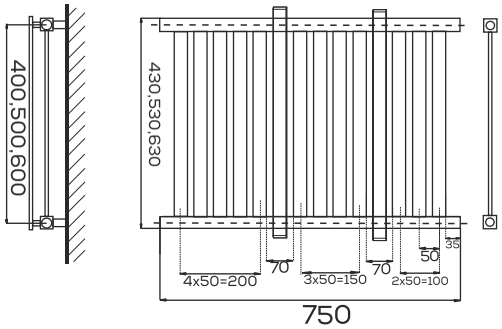

750

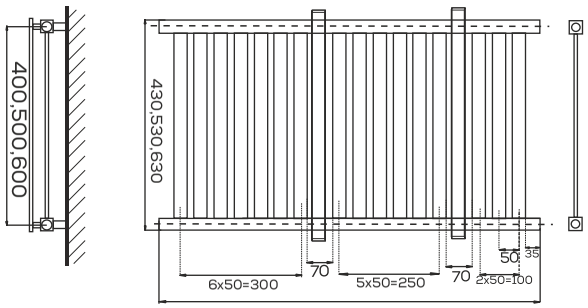

950

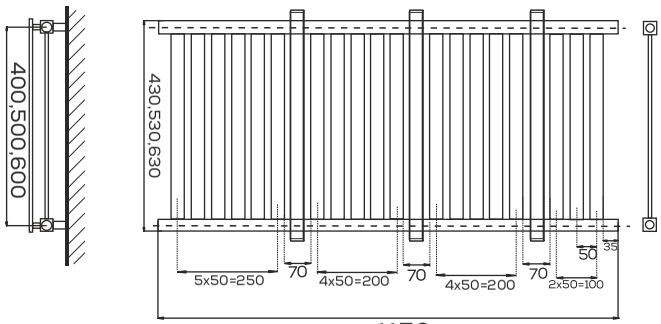

1150

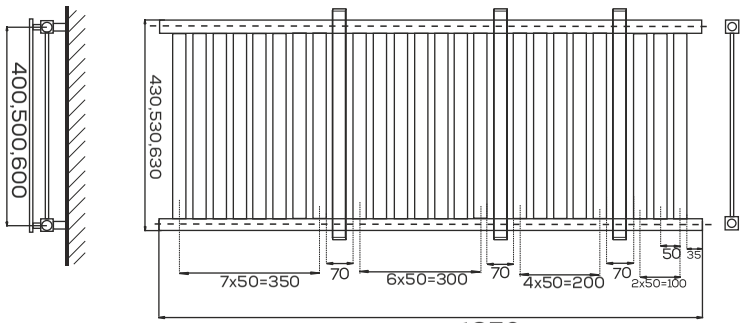

1350

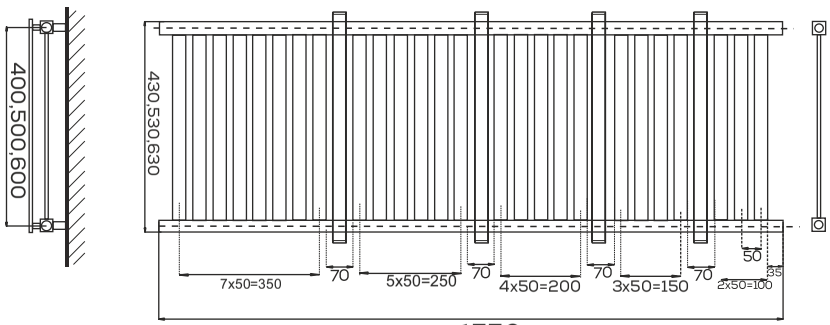

1550